evo automatic lifting hook
USER MANUAL

evo2 evo2l evo5 evo10c evo10 evo20c evo20 evo25

elebia®

smart lifting solutions

elebia®

How to obtain your certificate

01

Download the user manual
from Elebia's website
or through this QR code.

02

Read the user manual.

03

Take the certification exam

04

Once a year,
you'll be reminded
to update your certification

Disclaimer: This user manual is for informational purposes only. The manufacturer reserves the right to modify its specifications without prior notice.

Table of Contents

4 General Information
4 General Precautions
5 Restrictions
6 Main Features of the evo2 / evo2L automatic lifting hook
6 Main Features of the evo5 to evo25 automatic lifting hooks
7 Specifications
8 Regulatory Standards
9 Remote Controls
10 FCC, IC, CE & ARIB
11 evo2 / evo2L Battery & Charger
12 evo5 to evo25 Battery & Chargers
13 Installation
13 Lifting Procedure
14 Warranty
14 Inspection
15 Conformity Declaration & Manufacturer's Certificate

Disclaimer: This user manual is for informational purposes only. The manufacturer reserves the right to modify its specifications without prior notice.

This user's manual covers the Application, Operation, Use and Maintenance of the patented evo automatic lifting hook.

WARNING – STRONG MAGNETIC FIELD

- The evo automatic lifting hook features a powerful magnet.
- **People wearing a pacemaker must never approach the evo automatic lifting hook, as the magnetic field may interfere with the device's operation and pose serious health risks.**
- **Bear in mind that the magnet is strong enough to transport relatively heavy metallic elements unintentionally.**
- Do not approach it with metal items; Magnetic cards, credit cards, hard disks, and other sensitive devices may be damaged or disrupted if brought too close.

Warning

Prior to operation and/or maintenance of elebia products, read and understand the information provided in this user's manual.
Failure to review and utilize recommended applications, operation and maintenance instructions may result in serious injury to operator and others.
It is the sole responsibility of the operator to ensure the correct manipulation and handling of any load while using any of the elebia products. Automated processes in any lifting operation, whether attaching and/or releasing any load, or other, must always be submitted to visual inspection of the operator.
elebia designs and produces automated lifting solutions which enhance safety and productivity but can never replace the responsible and provident handling of all lifting processes.

General Information regarding the evo automatic lifting hook

Users must be aware of all operating conditions. Please contact our technical service in case of doubts and/or questions.
· The evo automatic lifting hook has specifically been designed for the lifting and transporting/moving of loads.
· The Working Load Limit is indicated per lifting hook and included in the CE stamp.
· Safety factor of 4:1.

General Precautions

Inappropriate use of the evo automatic lifting hook may give place to potentially dangerous situations and, if not prevented, these could lead to serious injury or death. To avoid such situations, we encourage to meet the following instructions:

1. Always read the user's manual instructions before using the evo automatic lifting hook.
2. Any operator must be familiarised with the evo automatic lifting hook's operation controls, procedures and warnings.
3. DO NOT operate the evo automatic lifting hook before having completely read and understood the manufacturer's user manual and instructions.

Disclaimer: This user manual is for informational purposes only. The manufacturer reserves the right to modify its specifications without prior notice.

4. DO NOT operate the evo automatic lifting hook if it has been altered without the manufacturer's approval.
5. DO NOT operate the evo automatic lifting hook if it is not working properly or if working unusually.
6. DO NOT operate the evo automatic lifting hook nor try to repair it if it may be damaged or lacks components.
7. DO NOT operate the evo automatic lifting hook if it has not been properly secured.
8. DO NOT lift nor pull more than the working load limit that is indicated per evo automatic lifting hook and which is included in the CE stamp.
9. DO NOT use the evo automatic lifting hook to lift, sustain or transport people.
10. DO NOT lift loads over people and ensure that people remain at a safe distance from the load.
11. DO NOT operate the evo automatic lifting hook unless all people are, and remain outside, the area of the sustained load.
12. DO NOT operate the evo automatic lifting hook if there are people touching or manipulating it.
13. DO NOT lift loads unless the load slings, chain slings, or other lifting accessories are of the correct size and suitably fastened to the evo automatic lifting hook.
14. DO NOT operate the evo automatic lifting hook with twisted, tangled, damaged or worn load slings, chain slings or other means and/or lifting accessories.
15. DO NOT place or lift the load on the tip nor the safety mechanism of the evo automatic lifting hook.
16. DO NOT use the evo automatic lifting hook's magnet to lift loads. The sole function of the magnet is to attract and align the sling, metal ring or lifting accessory.
17. DO NOT lift loads that are unbalanced or not secured or if the load is not suitably fastened. Any slackness must be carefully tightened.
18. DO NOT leave the weight sustained on the evo automatic lifting hook unattended unless specific precautions have been taken.
19. DO NOT attempt to open the evo automatic lifting hook with a suspended load.
20. DO NOT allow the use of the evo automatic lifting hook to make electrical or earth contact in welding operations.
21. DO NOT allow the evo automatic lifting hook or lifting chains to be touched by a live welding electrode.
22. DO NOT withdraw nor cover the warning signs of the evo automatic lifting hook.
23. DO NOT operate the evo automatic lifting hook if it lacks its safety signs or if they are illegible.
24. DO NOT operate the evo automatic lifting hook if it is not in a vertical position.
25. DO NOT modify the evo automatic lifting hook (by welding, grinding, etc.), as this can adversely affect its operation and safety.
26. Provide notification of any malfunction or abnormal performance of the evo automatic lifting hook after it has been disconnected for its repair.
27. The evo automatic lifting hook must be stored clean and in a non-humid area to protect against corrosion.
28. DO NOT store the evo automatic lifting hook with the battery inserted.

Restrictions

· Influences resulting from temperature

The evo automatic lifting hook has been designed to be used in normal atmospheric conditions and in a temperature range from -20 ºC to 60 ºC */ -4 ºF to 140 ºF*. The evo automatic lifting hook must not be used if these conditions are not met.

· Influences from acids/alkalines and chemicals

The evo automatic lifting hook must not be exposed to acids/alkalines or their vapours, as certain production methods may release acids and/or vapours.

Disclaimer: This user manual is for informational purposes only. The manufacturer reserves the right to modify its specifications without prior notice.

Main Features of the evo2 / evo2L automatic lifting hook

- **Top link**
  Can be customized in order to adapt itself to any situation.
- **Swivel with bearings**
  The bearings allow the evo2 / evo2L automatic lifting hook to rotate freely.
- **Swivel with lock**
  The operator can lock it at every 180º position.
- **Effcient Battery**
  Autonomy and consumption are optimized.
- **Clutch protected**
  Motor protected by slip clutch.
- **Position encoder**
  Contactless sensor which allows to know the exact position of the evo2 / evo2L automatic lifting hook.
- **Automatic latch**
  The latch retracts automatically while the evo2 / evo2L automatic lifting hook opens. This way, it remains hidden and protected.

Main Features of the evo5 to evo25 automatic lifting hooks

- Swivel with bearings
- Ready to be upgraded with load cell/weighing scale
- Removeable and rechargeable Li-Ion battery with LED charge indicator and locking system
- Position encoder with contactless sensor
- Clutch protected electric motor
- WELDOX® high strength structural steel body
- Manual operation button
- Impact and corrosion resistant polyester coating
- Magnetic field generator
- Spring-operated stainless steel safety latch
- Forged hook

Disclaimer: This user manual is for informational purposes only. The manufacturer reserves the right to modify its specifications without prior notice.

EN

Specifications

Model

	evo2	evo2L		evo5	evo10c	evo10	evo20c	evo20	evo25	
A	188 / *7.40*	215,3 / *8.47*	M	277 / *10.91*	277 / *10.91*	342 / *13.46*	311 / *12.24*	341 / *13.43*	341 / *13.43*	M
B	131,5 / *5.18*	131,5 / *5.18*	N	170 / *6.69*	170 / *6.69*	182.3 / *7.18*	182.3 / *7.18*	182.3 / *7.18*	182.3 / *7.18*	N
C	269.3 / *10.60*	294,4 / *11.59*	O	469 / *18.46*	519.8 / *20.46*	584 / *23.99*	624 / *24.57*	663 / *26.10*	735 / *28.94*	O
D	22 / *0.87*	22 / *0.87*	P	409 / *16.10*	451.3 / *17.76*	485 / *19.10*	520 / *20.47*	553 / *21.77*	618 / *24.33*	P
E	120.9 / *4.76*	129 / *5.07*	Q	194 / *7.64*	194 / *7.64*	246 / *9.68*	226 / *8.90*	246 / *9.68*	246 / *9.68*	Q
F	42.5 / *1.67*	59 / *2.32*	R	43 / *1.70*	43 / *1.70*	66 / *2.60*	66 / *2.60*	66 / *2.60*	66 / *2.60*	R
G	28.8 / *1.13*	32 / *1.25*	S	49 / *1.93*	68 / *2.68*	68 / *2.68*	105 / *4.13*	105 / *4.13*	138.5 / *5.45*	S
H	26.7 / *1.05*	27,1/ *1.06*	T	57.6 / *2.26*	57.6 / *2.26*	83 / *3.27*	50 / *1.97*	83 / *3.27*	83 / *3.27*	T
I	21.3 / *0.84*	21,5 / *0.84*	U	25 / *0.98*	25 / *0.98*	42 / *1.65*	42 / *1.65*	42 / *1.65*	42 / *1.65*	U
J	11 / *0.43*	11 / *0.43*	V	41 / *1.61*	41 / *1.61*	72 / *2.83*	66 / *2.60*	72 / *2.83*	72 / *2.83*	V
K	- / -	- / -	W	58 / *2.28*	82 / *3.23*	82 / *3.23*	115 / *4.53*	115 / *4.53*	133 / *5.24*	W
L	- / -	- / -	X	350 / *13.78*	400.4 / *15.76*	400.4 / *15.76*	480 / *18.90*	480 / *18.90*	550 / *21.65*	X
			Y	15 / *0.59*	22 / *0.87*	22 / *0.87*	29 / *1.14*	29 / *1.14*	34 / *1.34*	Y

mm / *in.*

evo2 / evo2L

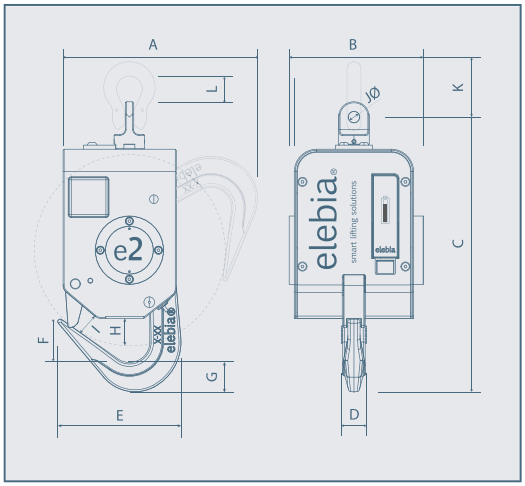

evo5 to evo25

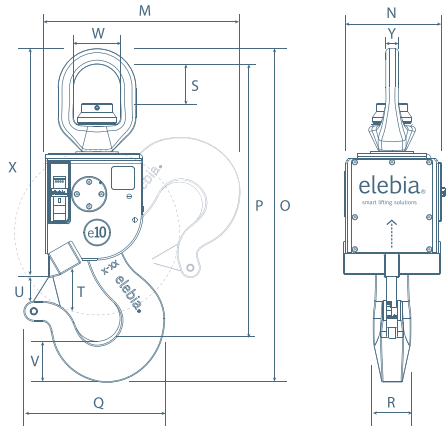

elebia®

Specifications

Model	evo2	evo2L	evo5	evo10c	evo10	evo20c	evo20	evo25
Working Load Limit Safety Factor 4:1	**2,500 kg** *5.511 lb.*	**2,500 kg** *5.511 lb.*	**5,000 kg** *11.023 lb.*	**10,000 kg** *22.046 lb.*	**10,000 kg** *22.046 lb.*	**20,000 kg** *44.092 lb.*	**20,000 kg** *44.092 lb.*	**25,000 kg** *55.115 lb.*
Weight	**7 kg** *15.43 lb.*	**8 kg** *17.64 lb.*	**26 kg** *57.32 lb.*	**31 kg** *68.34 lb.*	**36 kg** *79.36 lb.*	**40 kg** *88.18 lb.*	**43 kg** *94.79 lb.*	**48 kg** *105.82 lb.*
Max. Releasable Weight*	**20 kgs** *44.09 lbs.*		**15-30 kgs** *33.07- 66.13 lbs.*		**20 kgs** *44.09 lbs.*			

* For higher values, please contact the sales department.

Regulatory Standards

ASME B30.10-2009
ASME B30.10-2010
EN 10204 3.1.B
UNE-EN 1050
UNE-EN 1677-1:2001+A1:2009
UNE-EN 1677-2:2001+A1:2008
UNE-EN 602041:2007
UNE-EN 61000-6-4:2007
UNE-EN 61000-6-2:2006
UNE-EN ISO12100:2012
UN - 38.3
D89/391/EEC
D89/654/EEC
D89/655/EEC
D89/656/EEC
D92/58/EEC 9a

- Directive on Machine Safety (D2006/42/EC).
- EMC Directive (2014/30/EU).
- Low Voltage Directive (2014/35/EU).
- Radio Equipment Directive (2014/53/EU).
- Assurance of Production Quality in accordance with ISO9001.
- DNV 2.22 Certified (evo5 / evo10 / evo20).
- ARIB Construction Design Certification Number 203-JN0689.
- FCC Identifier 2ACLHEVO for Equipment Class: Digital Transmission System.
- Each mechanism is delivered with the CE stamp and a declaration of CE conformity.
- elebia is a member of F.E.M. (European Federation of Materials Handling).

The EVO hooks have been designed incorporating the essential safety requirements of international lifting standards; however, due to their nature as an automatic device, certain provisions (especially those relating to geometry) are met in a limited manner.

Disclaimer: This user manual is for informational purposes only. The manufacturer reserves the right to modify its specifications without prior notice.

Remote Controls

The patented evo automatic lifting hook can be paired to the eMAX remote control, the eMINI remote control and/or the eINST installable remote control.

eMINI

The eMINI is a small and compact remote control. With the eMINI remote control, the operator can open and close the evo lifting hook and control its battery level. The eMINI also displays sensor information and maintenance messages.

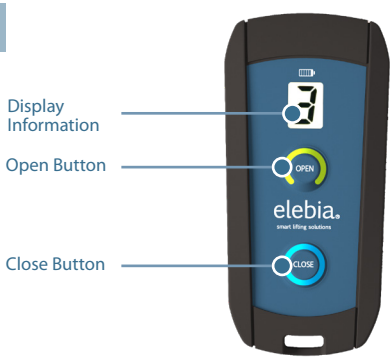

Display Information

0 to 9:	Battery level of the evo lifting hook
A:	Low battery level of the eMINI remote control
C:	Maintenance review of the evo lifting hook
b:	The eMINI remote control does not detect the evo lifting hook

For more information on the eMINI remote control, please refer to the eMINI remote control user manual visiting **www.elebia.com/downloads**

Power Supply	One 3V lithium battery (CR2032)
Available Code Combinations	65,536 different combinations
Detection of Errors in Transmission	2 CRC bytes + Forward Error Correction
Buttons	2
Frequency Selection	1
Frequencies	868 MHz / 924.1 MHz
Communication	Bi-directional return of receiver battery status
Radiated Power	Under 5 dBm
Antenna	Printed circuit
Range	100 metres */ 330 Feet*
Working Temperature	-20 ºC to 85 ºC */ -4 ºF to 185 ºF*
Dimensions	Minitel box (68 x 52 x 17 mm */ 2.68 x 2.05 x 0.67 in.)*

Disclaimer: This user manual is for informational purposes only. The manufacturer reserves the right to modify its specifications without prior notice.

eINST

The evo automatic lifting hook can also be controlled using a free channel of the crane's master control. The eINST remote control has to be placed in the crane relay cabinet, where only simple wiring is needed. It may be used by pairing to a free channel of the crane's master control. It is compatible with all cranes.

The eINST remote control can block the upward movement of the crane when the evo automatic lifting hook is in intermediate position.

Available as 10V DC to 60V DC
Dimensions: 100 x 100 x 40 mm. / *3.94 x 3.94 x 1.57 in*

For more information on the eINST remote control,
please refer to the eINST remote control user manual.
www.elebia.com/downloads

eMAX

The eMAX is our most advanced remote control. It displays all the info in a big high-resolution screen and a high-profile keypad, yet remains handy and lightweight.

For more information on the eMAX remote control,
please refer to the eMAX remote control user manual.
www.elebia.com/downloads

FCC, IC, CE & ARIB

This equipment complies with FCC radiation exposure limits set forth for an uncontrolled environment. This transmitter must not be co-located or operating in conjunction with any other antenna or transmitter, except in accordance with FCC multi-transmitter product procedures.

Any changes or modifications not expressly approved by the warranty of this device could void the user's authority to operate the equipment.

Note: This equipment has been tested and found to comply with the limits for a Class B digital device, pursuant to part 15 of the FCC Rules. These limits are designed to provide reasonable protection against harmful interference in a residential installation. This equipment generates, uses and can radiate radio frequency energy and, if not installed and used in accordance with the instructions, may cause harmful interference to radio communications. However, there is no guarantee that interference will not occur in a particular installation. If this equipment does cause harmful interference to radio or television reception, which can be determined by turning the equipment off and on, the user is encouraged to try to correct the interference by one or more of the following measures: Reorient or relocate the receiving antenna; Increase the separation between the equipment and receiver.

Disclaimer: This user manual is for informational purposes only. The manufacturer reserves the right to modify its specifications without prior notice.

evo2 / evo2L Battery

Type	Rechargeable Li-Ion
Configuration	3S1P
Maximum Voltage	12.6 V DC
Nominal Voltage	10.8 V DC
Nominal Capacity	3.4 Ah DC / 36,72 Wh
Protection Circuit	Charge, Discharge, Overvoltage
Maximum Discharge Current	8 A for 1 second (idle time 5s)
Heat protection	Thermal 70ºC / *158 ºF*
Temperature	0 ºC to 45 ºC / *32 ºF to 113 ºF*
Temperature (Charge)	-20 ºC to 50 ºC / *-4 ºF to 122 ºF*
Temperature (Discharge)	-20 ºC to 60 ºC / *-4 ºF to 140 ºF*
Temperature (Idle)	-20 ºC to 60 ºC / *-4 ºF to 140 ºF*
Weight	200 g aprox / *7.05 oz.*

- Charging time: 3h (using elebia charger)

For more information on the battery,
please refer to the evo2 battery user manual.
www.elebia.com/downloads

evo2 / evo2L 100-240V Battery Charger

Technical Specifications:

Input Voltage	100-240 V AC / 50-60Hz. 1.0A (max.)
Output	12.6 V DC / 1.2A
Charge Indicator	No
Charge Complete Indicator	No

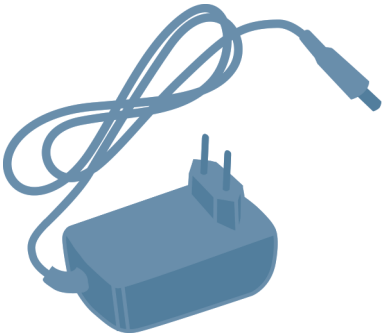

For more information on the charger,
please refer to the evo2 battery charger user manual.
www.elebia.com/downloads

Disclaimer: This user manual is for informational purposes only. The manufacturer reserves the right to modify its specifications without prior notice.

evo5 to evo25 Battery

Technology	Rechargeable Li-Ion
Maximum Voltage	25.2 V DC
Nominal Voltage	22.2 V DC
Nominal Capacity	2,6 Ah / 56,16 Wh
Protection Circuit	Charge, Discharge, Overvoltage
Maximum Discharge Current	7.8 A for 1 second (iddle time 5s)
Heat Protection	Thermal 70 ºC / *158 ºF*
Charge Indicator	Display on 4 LED (25%- 5'%- 75%- 100%)
Temperature (Charge)	0 ºC to 45 ºC / *32 ºF to 113 ºF*
Temperature (Discharge)	-20 ºC to 50 ºC / *-4 ºF to 122 ºF*
Temperature (Idle)	-20 ºC to 60 ºC / *-4 ºF to 140 ºF*
Weight	400 g / *14.10 oz.*

- Charging time: 3h (using elebia charger)

For more information on the S40 Automatic Shackle Battery,
please refer to the S40 Automatic Shackle Battery control user manual.
www.elebia.com/downloads

evo5 to evo25 100-240V Battery Charger

Technical Specifications:

Input Voltage	100-240 V AC / 50-60Hz. 0.15A (max.)
Output	25.2 V DC / 1A
Charge Indicator	Yes, by red LED
Charge Complete Indicator	Yes, by green LED

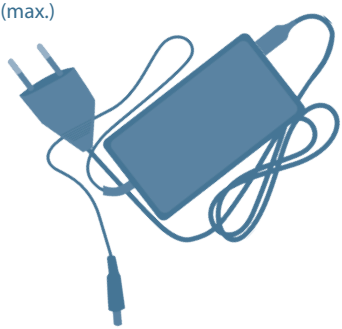

Disclaimer: This user manual is for informational purposes only. The manufacturer reserves the right to modify its specifications without prior notice.

Installation

The start-up is done by inserting the battery. The battery must be fully charged.

1.

Attach the evo automatic lifting hook to the crane...

2.

…insert the battery…

3.

…and connect the battery by pressing the ON/OFF button.

Lifting Procedure

The magnet of the evo automatic lifting hook generates a magnetic field that attracts, centers and orients the sling, masterlink or rigging gear. The operator, by use of the remote control, closes the evo automatic lifting hook, which catches the lifting accessory and lifts the load without any additional handling.

1. Attract 2. Center 3. Orient 4. Close 5. Lift

Warning

1. DO NOT place or lift the load on the tip of the evo automatic lifting hook!
2. DO NOT lift the load until the evo automatic lifting hook is completely closed!
3. Only lift the load when it is correctly settled on the base of the evo automatic lifting hook.

1. **2.** **3.**

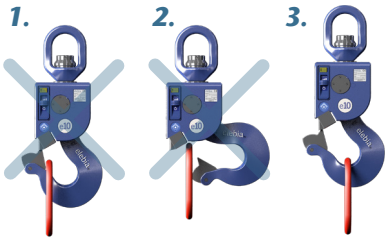

General Information regarding the evo automatic lifting hook

Prior to operation and/or maintenance of elebia products, read and understand the information provided in this user's manual.

Failure to review and utilize recommended applications, operation and maintenance instructions may result in serious injury to operator and others.
It is the sole responsibility of the operator to ensure the correct manipulation and handling of any load while using any of the elebia products. Automated processes in any lifting operation, whether attaching and/or releasing any load, or other, must always be submitted to visual inspection of the operator.
elebia designs and produces automated lifting solutions which enhance safety and productivity but can never replace the responsible and provident handling of all lifting processes.

Warranty

The warranty of the evo automatic lifting hook is for 2 years and covers parts and labour for the use envisaged and recommended in the user manual. Batteries and maintenance operations, and the materials and labour involved therein, are exempt from the warranty. Non-performance of checks and maintenance may lead to cancellation of the warranty.

This warranty is limited to the original end user of the lifting equipment and is subject to the equipment being inspected, controlled and maintained according to the manufacturer and dealer instructions throughout the warranty period. The warranty period is for 2 years from the purchase date and is subject to the conditions and measures given here.

Please note: Batteries for evo hooks have a separate 12-month warranty.

Warranty will not be valid when any of the following measures are met:

- Overload.
- Wrong and/or carelessly use.
- Damages by not following procedures and measures.
- Damages by hoisting differing material other then indicated on the evo automatic lifting hook or stated in the user manual.
- Adapting and/or modifying the evo automatic lifting hook.
- The injudicious use of the evo automatic lifting hook, and not succeeding all indications which are stated in the user manual.
- When maintenance inspections have not been carried out by the authorised Elebia Autohooks SLU Technical Service.

The manufacturer is not responsible for incidental damage, or damage due to wrong use of the lifting tools as well as from violation of this manual.

Disclaimer: This user manual is for informational purposes only. The manufacturer reserves the right to modify its specifications without prior notice.

End of life

The device must be removed from service once the SL is reached. Using an Evo device beyond its designated service life can lead to serious safety risks, including potential failure during use, breakage, and safety hazards for personnel and equipment.
For this reason, the evo hook must be discarded after reaching its maximum life cycle.
The service life for each evo model is as follows:

evo 2: 100,000 cycles
evo 2L: 100,000 cycles
evo 5: 100,000 cycles
evo 10: 100,000 cycles
evo 10c: 100,000 cycles
evo 20: 100,000 cycles
evo 20c: 100,000 cycles
evo 25: 100,000 cycles

Service life is reduced to 20,000 cycles for units with custom links or load cells. Accessories like master links and shackles must be replaced every 20,000 cycles or as recommended by their manufacturer.

Disclaimer: This user manual is for informational purposes only. The manufacturer reserves the right to modify its specifications without prior notice.

elebia®

Conformity Declaration and Manufacturer's Certificate

ELEBIA AUTOHOOKS, S.L.U., with registered office at Plaça Pere Llauger Prim, naus 10-11, Polígon Industrial Can Misser, 08360, Canet de Mar, (Barcelona), Spain, Tax Identification Certificate B65770265, and ISO 9001 Certificate No. 9000041

DECLARES:
Under its sole responsibility, that the following evo automatic lifting hook, model _____, with serial number _____, with a maximum operating load of _____ kg, complies with the EC Machinery Directive 2006/42/EC of the European Parliament and of the Council, of 22 June 1998, on the approximation of the laws of the Member States relating to machinery, and 2004/108/EC, on the approximation of the laws of the Member States relating to electromagnetic compatibility, and has been manufactured in accordance with the following harmonised standards:

EN 10204 3.1.B; UNE-EN 1050; UNE-EN 1677-1:2001 + A1:2009; UNE-EN 1677-2:2001 + A1:2008; UNE-EN 60204-1:2007; UNE-EN 61000-6-4:2007; UNE-EN 61000-6-2:2006; UNE-EN ISO 12100:2012; D89/391/EEC; D89/654/EEC; D89/655/EEC; D89/656/EEC; D92/58/EEC 9a

As stipulated by Directive on Machine Safety D2006/42/EC
- CE symbol fixed to the evo automatic lifting hook
- Technical documentation filed in manufacturer's site

Authorised signatory:
Oscar Fillol Vidal
Person authorised to compile the technical file
CEO of ELEBIA AUTOHOOKS

Barcelona, February 2025

Disclaimer: This user manual is for informational purposes only. The manufacturer reserves the right to modify its specifications without prior notice.

Inspection and Maintenance

The purpose of this document is to set the guidelines for inspection and maintenance of evo2 - evo25.

Definitions

Normal service: service that involves operation with various weights within the rated load limit, averaging less than 65% of rated load limit.
Heavy service: service that involves operation within the rated load limit that exceeds the limits of normal service.
Severe service: service that involves normal or heavy service with abnormal operating conditions.

Inspection

New evo2 - evo25s shall be inspected by a designated person prior to initial use.
Repaired evo2 - evo25s shall be inspected by a designated person

Inspection Intervals

evo2 - evo25s shall be inspected at different intervals. These are every lift, frequent and periodic. The periodicity of these intervals depends on the service level.
Every lift and frequent inspections must be conducted by a certified user.
Periodic inspections must be carried out by personnel designated by Elebia.

Pre-shift and Every Lift Inspection

It is the responsibility of the operator to inspect the following items before every shift and every lift for any indication of damage or malfunctioning. This includes making observations during operation for any damage, misused or malfunctioning that might occur during the lift.:

- CE plate with the WLL is not missing
- Any structural part shows any signs of deformation nor cracks.
- The hook range of motion is complete. If the bumper has LEDs, the LEDs displaying the following colours: blue when the pin is fully closed, green when it is fully open and red when it is in transition.
- The evo2 - evo25 can align with the load.
- The latch retracts as the hook opens.

Frequent Inspection

Frequent inspection shall be performed by the operator or other designated person. No records are required. Inspection intervals depend on the service as follows:

Normal service: monthly
Heavy service: weekly to monthly
Severe service: daily to weekly

A visual inspection shall be carried out to check for the items listed in the Annex.
Conditions such as the listed or any other condition that may result in a hazard, shall cause the evo2 - evo25 to be removed from service. The evo2 - evo25 shall not be returned to service until approved by a qualified person.
Any indications of electrical contact or known instances of electric contact which could affect electrical function and/or dependability of indicators shall be a condition requiring removal from service until the hook can be checked.

Periodic Inspection

Periodic inspection shall be performed by a qualified person. Records are required. Inspection intervals depend on the service as follows:

Normal service: yearly
Heavy service: semi-annually
Severe service: quarterly

A qualified person shall determine whether any indications of damage constitute a hazard or will require more frequent inspection.
A complete inspection shall be carried out to check for the items listed in the Annex.
Any unauthorized modifications shall be a condition requiring removal from service.

Any indications of electrical contact or known instances of electric contact which could affect electrical function and/or dependability of indicators shall be a condition requiring removal from service until the hook can be checked.

Nota: Questo manuale è solo per riferimento. Il produttore si riserva il diritto di modificare senza preavviso le specifiche in esso contenute.

Annex. Periodic Inspection Record Document

Inspection Details

Date	Performed by	Equipment SN	Location	Service Type

Partial Cycles		Total Cycles	

Inspection Checklist

Check Item	Pass	Fail
Legible CE plate (WLL, serial number, SF, …)		
LEDs fully operational (only applicable if bumper with LEDs is installed)		
Complete hook range of motion		
Proper safety latch movement (not applicable if rigid latch installed)		
Stretched, bent, twisted, distorted, elongated, cracked or broken load-bearing components		
Excessive wear (more than 5%)		
Cracks, nicks or gouges		
Excessive pitting or corrosion		
Heat damage		
Evidence of welding or modification		
Total cycles are below the Service life		
Other conditions:		

Signature and/or Stamp

elebia®

smart lifting solutions

Plaça Pere Llauger Prim, Naus 10-11
Polígon Industrial Can Misser
08360 Canet de Mar (Barcelona) Spain

www.elebia.com
info@elebia.com